B-ISL700

S/S OUTLET BENCH LEFT HANDED

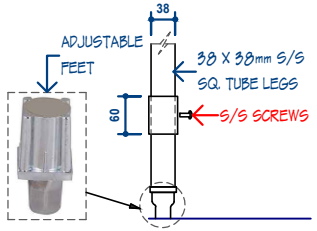

BOTTOM RAIL

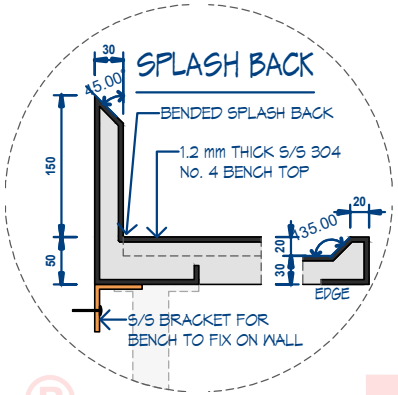

FEATURES:

- **Top:** 1.2mm SUS 304Top, Legs Sus 201
- 150mm high splash back with beveled edge
- Satin polish stainless steel 38mm square frame
- Flat packed for easy transport
- Quick and simple assembly, adjustable feet
- supplied with fixing wall bracket
- Full length wet edge with 50mm fascia

SPECIFICATIONS:

- **DIMENSIONS:** **W**700 x **D**760 x **H**900+150mm
- **Weight: 22kg**

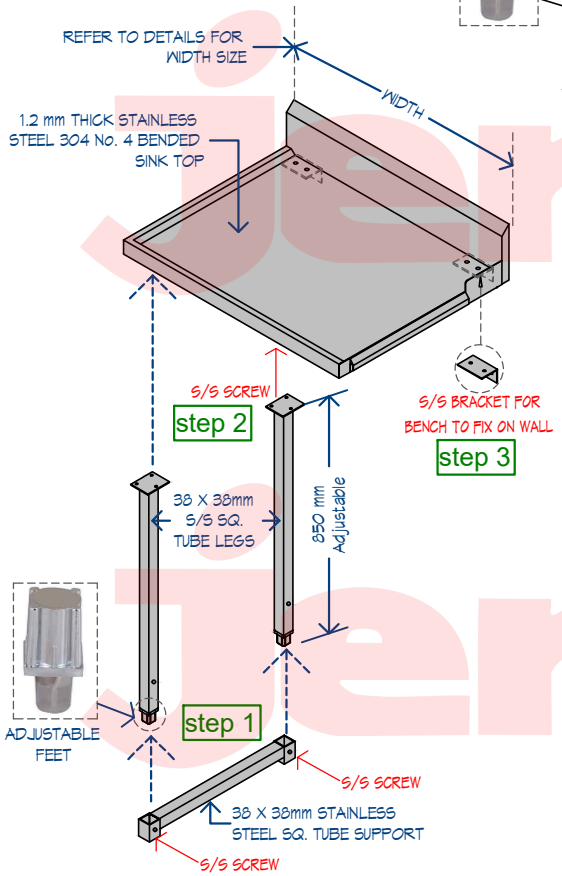

STANDARD OUTLET BENCH ASSEMBLY

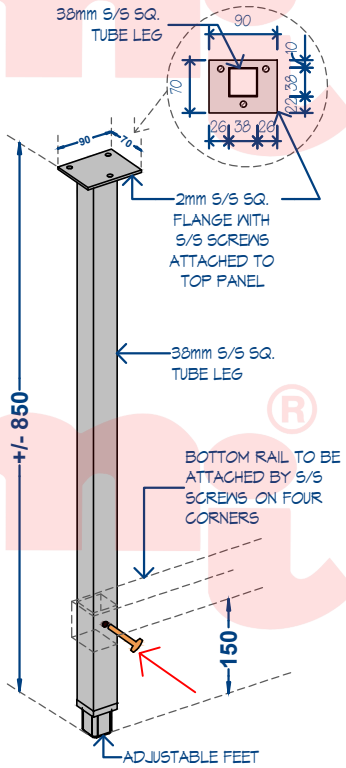

STANDARD LEG

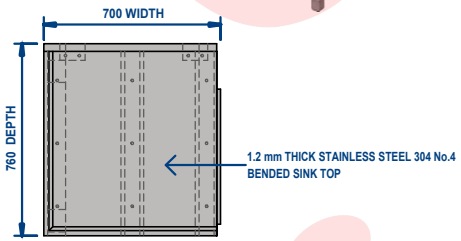

B-ISL700 TOP

Scale : 1 : 30M

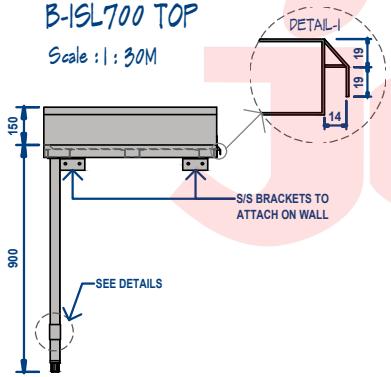

B-ISL700 FRONT

Scale : 1 : 30M

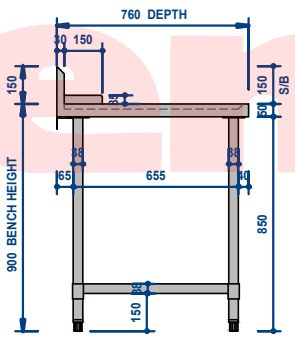

B-ISL700 SIDE

Scale : 1 : 30M

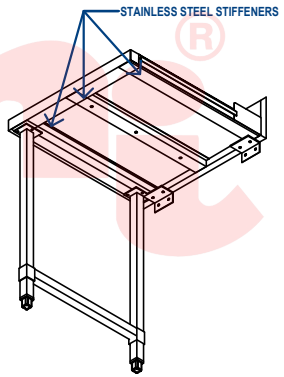

BOTTOM VIEW

THIS DRAWING MUST NOT BE SCALED

THE CONTRACTOR SHALL VERIFY ALL DIMENSIONS, DATA AND LEVEL PRIOR TO THE COMMENCEMENT OF WORK. ALL ERRORS AND OMISSIONS BETWEEN THE DRAWINGS AND SPECIFICATION ARE TO BE REPORTED IMMEDIATELY.

-----© Copyright of Hospitality Equipment 2020 Pty. Ltd.-----

HE2020 HOSPITALITY EQUIPMENT 2020 PTY LTD
HOSPITALITY EQUIPMENT 2020 Pty. Ltd.
A: Unit 3/49-63 Victoria Street, Smithfield NSW 2164
P: 02 9637 3737
E: salesnsw@he2020.com.au
W: www.he2020.com.au
COMMERCIAL KITCHEN CONSULTANT

DRAWING TITLE: B-ISL700		
DRAWN: L.	DATE: Sept. 27, 2021	SCALE (A4): As indicated
PROJECT NO. 01	DRAWING NO. D2	REV. A1