B-SPS3-1200

S/S POT RACK SHELF 1-TIER

FEATURES:

- Stainless steel constructions
- Single tier, solid wall shelf
- **Dimensions: W**1200 x **D**325 x **H**300mm

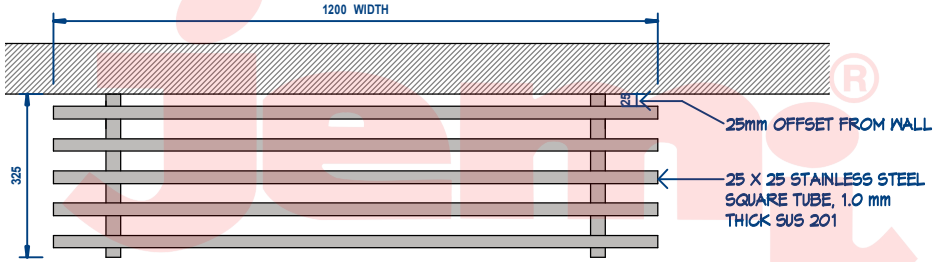

B-SPS3-1200 TOP

Scale : 1 : 15M

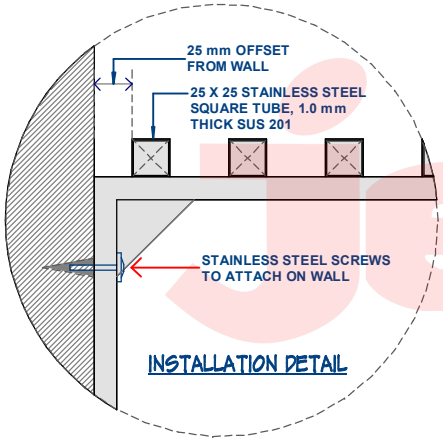

INSTALLATION DETAIL

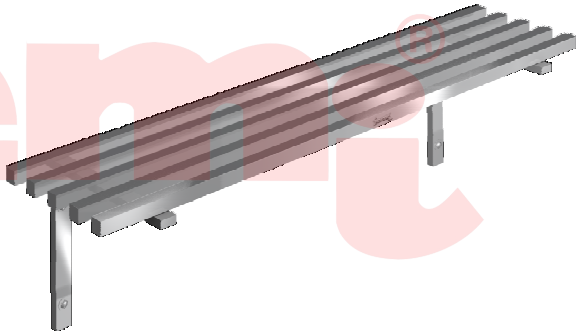

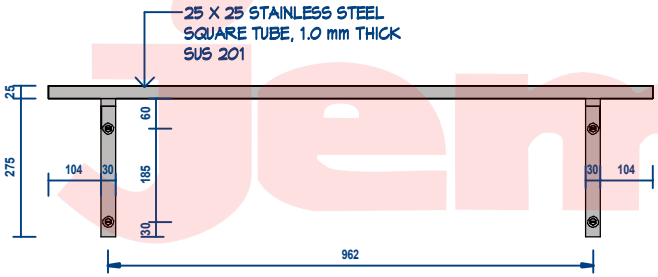

B-SPS3-1200 FRONT

Scale : 1 : 15M

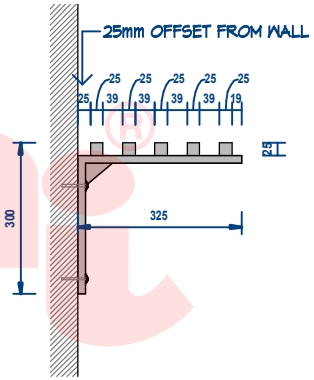

B-SPS3-1200 SIDE

Scale : 1 : 15M

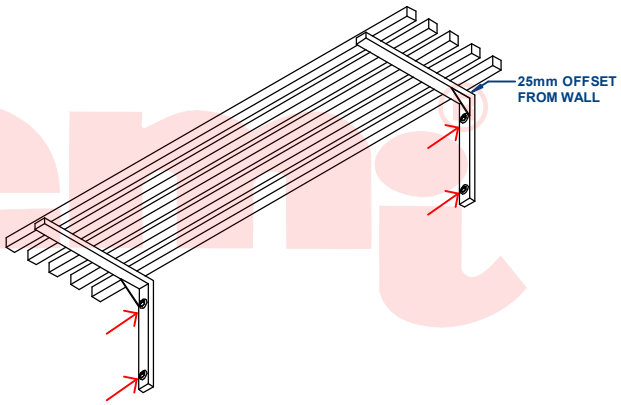

BOTTOM VIEW

THIS DRAWING MUST NOT BE SCALED

THE CONTRACTOR SHALL VERIFY ALL DIMENSIONS, DATA AND LEVEL PRIOR TO THE COMMENCEMENT OF WORK. ALL ERRORS AND OMISSIONS BETWEEN THE DRAWINGS AND SPECIFICATION ARE TO BE REPORTED IMMEDIATELY.

-----© Copyright of Hospitality Equipment 2020 Pty. Ltd.-----

GREEN Line® lamber® LAVA RANGE®

HE2020 HOSPITALITY EQUIPMENT 2020 PTY LTD
HOSPITALITY EQUIPMENT 2020 Pty. Ltd.
A: Unit 3/49-63 Victoria Street, Smithfield NSW 2164
P: 02 9637 3737
E: salesnsw@he2020.com.au
W: www.he2020.com.au
COMMERCIAL KITCHEN CONSULTANT

DRAWING TITLE: B-SPS3-1200		
DRAWN: L.	DATE: Sep. 27, 2021	SCALE (A4): As indicated
PROJECT NO.: 01	DRAWING NO.: B3	REV.: A1