B-WB2S-1200
COMMERCIAL KITCHEN DOUBLE SINK

Simply The Best

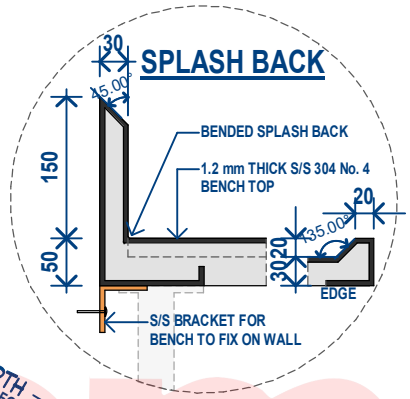

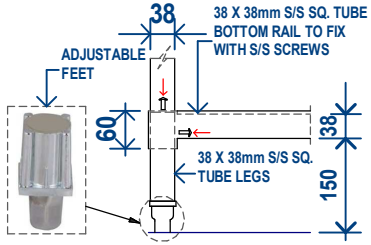

BOTTOM RAIL

NOTE:
ALL EXTERNAL STAINLESS STEEL SHOULD BE IN SATIN FINISH #4, TOP & LEGS

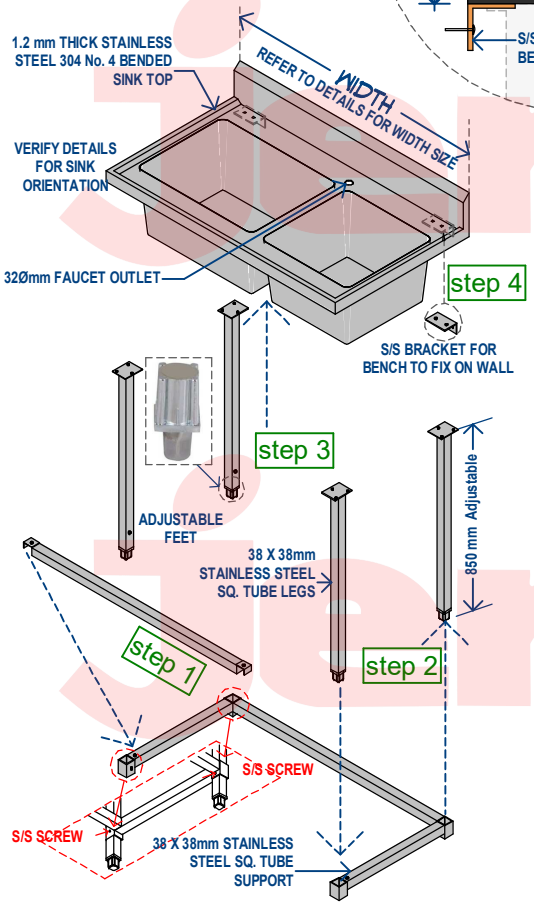

STANDARD SINK ASSEMBLY

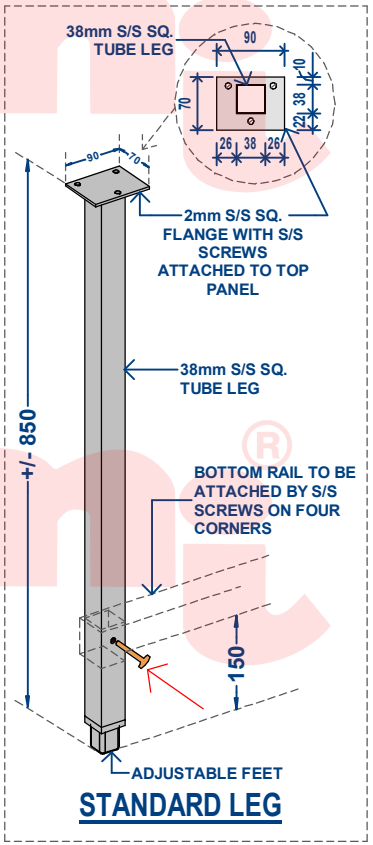

STANDARD LEG

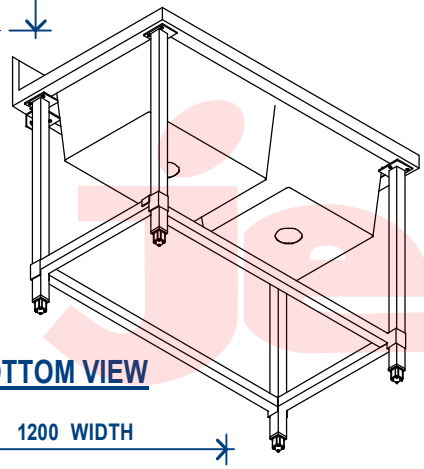

BOTTOM VIEW

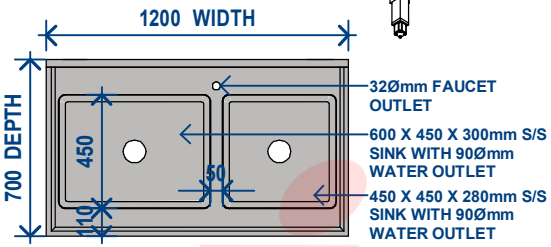

B-WB2S-1200 TOP
Scale : 1 : 30M

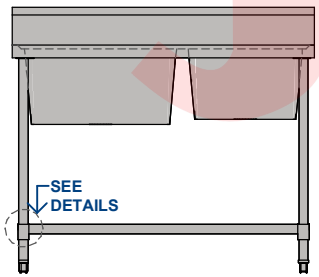

B-WB2S-1200 FRONT
Scale : 1 : 30M

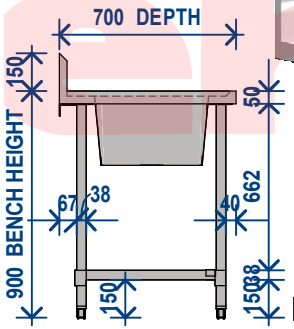

B-WB2S-1200 SIDE
Scale : 1 : 30M

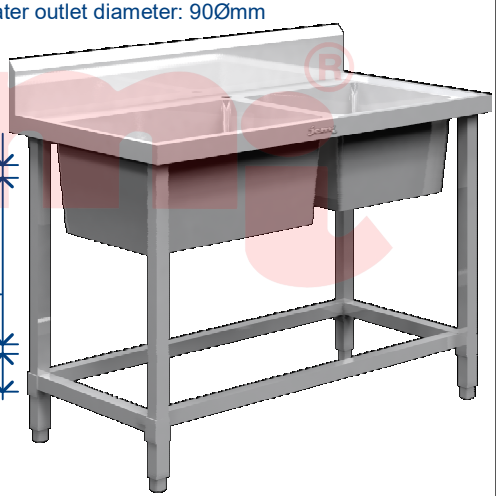

FEATURES:
- High quality Heavy duty full stainless kitchen benches **in FINISH #4 (SATIN)**
- **Top:** 1.2mm SUS 304Top, Legs Sus 201
- Top hat stainless stiffening
- 1/4" hex screws make these units second to none in strength and appearance
- Stainless steel frames
- Easy to assemble
- Easy to clean

SPECIFICATIONS:
- **Feet:** adjustable stainless feet (60mm - 70mm), 38mm square tube legs
- **Splash back:** 150mm H, 45° angle scaled back
- **Fascia:** 50mm rolled back edge
- Bracket: Fxing bracket to wall supplied
- **Dimensions: W**1200 x **D**700 x **H**900, bench height / 1050mm, total height

Sink size:
- **Large: W**600 x **D**450 x **H**300, Water outlet diameter: 90Ømm
- **Small: W**450 x **D**450 x **H**280, Water outlet diameter: 90Ømm

THIS DRAWING MUST NOT BE SCALED

THE CONTRACTOR SHALL VERIFY ALL DIMENSIONS, DATA AND LEVEL PRIOR TO THE COMMENCEMENT OF WORK. ALL ERRORS AND OMISSIONS BETWEEN THE DRAWINGS AND SPECIFICATION ARE TO BE REPORTED IMMEDIATELY.

-----© Copyright of Hospitality Equipment 2020 Pty. Ltd. HE2020 -----

GREEN Line® lamber® LAVA RANGE

HE2020
HOSPITALITY EQUIPMENT 2020 PTY LTD
A: Unit 3/49-63 Victoria Street, Smithfield NSW 2164
P: 02 9637 3737
E: salesnsw@he2020.com.au
W: www.he2020.com.au
COMMERCIAL KITCHEN CONSULTANT

DRAWING TITLE: B-WB2S-1200

DRAWN	DATE	SCALE (A4)
L.	Apr. 01, 2022	As indicated

PROJECT NO.	DRAWING NO.	REV.
01	D8	A1