jemi®
Simply The Best

SKB10
COMMERCIAL KITCHEN SCRAPING BENCH 1000mm

NOTE:
ALL EXTERNAL STAINLESS STEEL SHOULD BE IN SATIN FINISH #4, TOP & LEGS

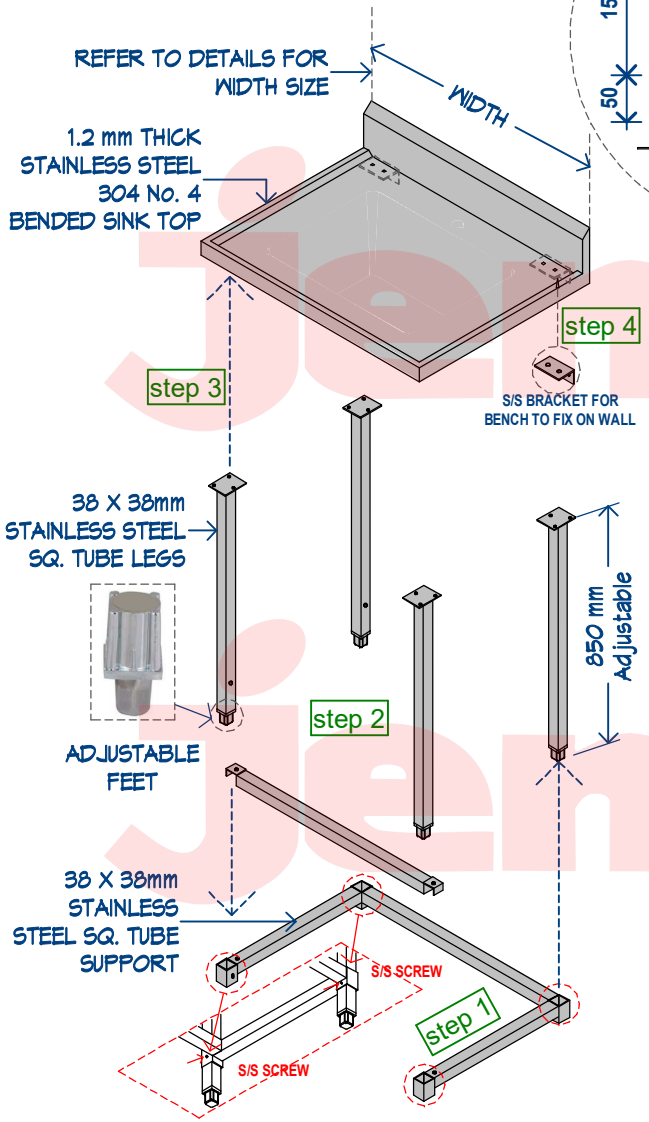

STANDARD SINK ASSEMBLY

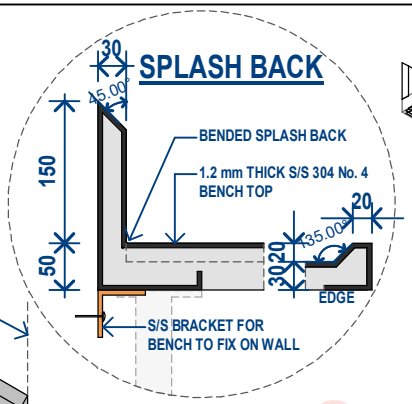

SPLASH BACK

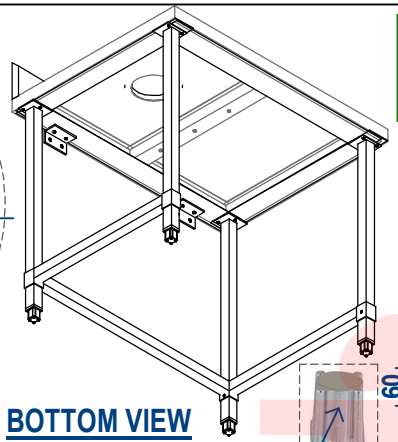

BOTTOM VIEW

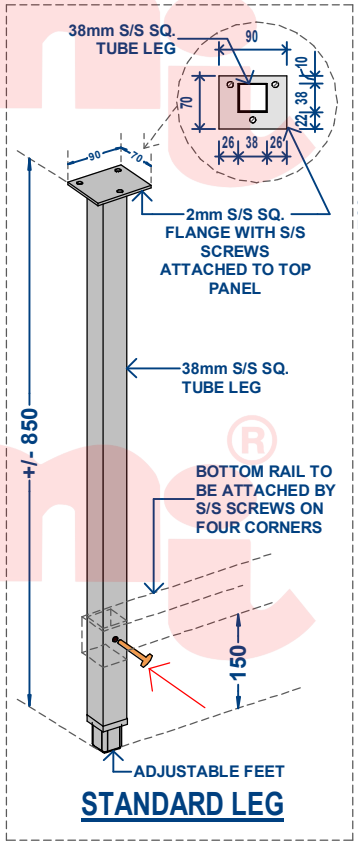

STANDARD LEG

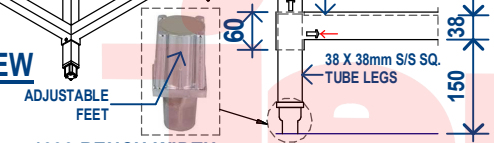

BOTTOM RAIL

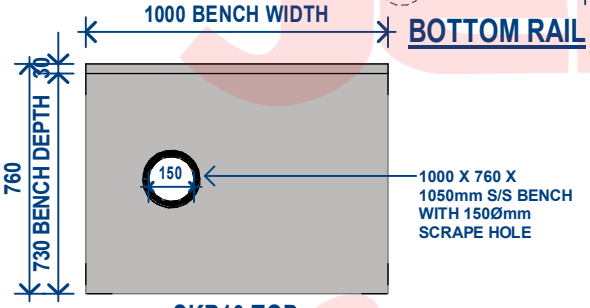

SKB10 TOP
Scale : 1 : 25M

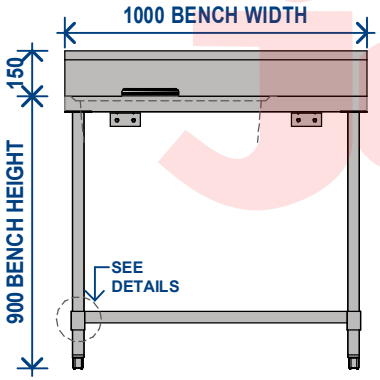

SKB10 FRONT
Scale : 1 : 25M

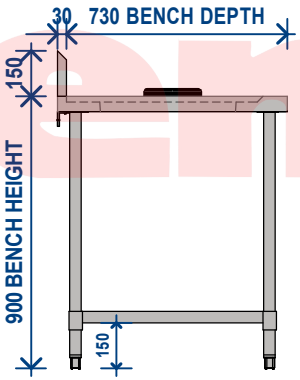

SKB10 SIDE
Scale : 1 : 25M

FEATURES:

- High quality Heavy duty full stainless kitchen benches **in FINISH #4 (SATIN)**
- **Top:** 1.2mm SUS 304 Top, Legs Sus 201
- Top hat stainless stiffening 1/4" hex screws make these units second to none in strength and appearance
- Easy to assemble
- Easy to clean

SPECIFICATIONS:

- **Feet:** adjustable stainless feet (60mm - 70mm)
- 38mm square tube legs
- **Splash back:**150mm **H**, 45° angle scaled back
- **Fascia:** 50mm rolled back edge
- **Under shelves:** full stainless steel 25x25 square tube under shelf and frames - 1.2mm
- **Scrape hole diameter:** 150Ømm
- **Bracket:** Fixing bracket to wall supplied
- **Dimensions:** **W**1000 x **D**760 x **H**900, bench height/ 1050mm, total height

THIS DRAWING MUST NOT BE SCALED
THE CONTRACTOR SHALL VERIFY ALL DIMENSIONS, DATA AND LEVEL PRIOR TO THE COMMENCEMENT OF WORK. ALL ERRORS AND OMISSIONS BETWEEN THE DRAWINGS AND SPECIFICATION ARE TO BE REPORTED IMMEDIATELY.

-----© Copyright of Hospitality Equipment 2020 Pty. Ltd. HE2020 -----

GREEN Line® lamber® LAVA RANGE

HE2020 HOSPITALITY EQUIPMENT 2020 PTY LTD
HOSPITALITY EQUIPMENT 2020 Pty. Ltd.
A: Unit 3/49-63 Victoria Street, Smithfield NSW 2164
P: 02 9637 3737
E: salesnsw@he2020.com.au
W: www.he2020.com.au
COMMERCIAL KITCHEN CONSULTANT

DRAWING TITLE: SKB10		
DRAWN: L.	DATE: Apr. 01, 2022	SCALE (A4): As indicated
PROJECT NO.: 01	DRAWING NO.: D1	REV.: A1